Chapter 4

System Connection and Operation

4.1 Overview

This chapter describes the operation of the Suma subsystem. This includes connecting to different external devices and powering on and off the subsystem. This chapter gives a short introduction to fibre channel topologies, SFP connectors, lasers etc. It also shows how the different models can be integrated into a storage network and a complete description of the power on and power off procedure is given.

4.2 FC Host Connection Pre-Requisites

NOTE
The topics covered in section 4.2 only pertain to the FC models. If you have purchased a SCSI model please go to section 4.3 for sample topologies.

4.2.1 Cabling

The FC Standard allows for optical connections. Optical cables can be used over long distances and have been shown to be more reliable. Due to the extremely high data transfer rates, optical cables

are preferred for 2Gbps fibre connectivity. Optical cables are less susceptible to EMI.

WARNING:
All Cables must be handled with care. They must not be bent; and to prevent interference within a rack system the routing path must be carefully planned.

4.2.2 FC Lasers

WARNING:
Lasers can cause permanent eye damage, which may result in permanent blindness, and therefore must be treated with respect and used with caution. Never look at lasers without knowing whether they are on or off is ***hazardous****.*

Wavelengths: - The lasers on fibre channel fiber optic cables emit either short wave (SW) beams (770nm – 860nm) or long wave (LW) (1270 nm - 1355 nm) beams. Cables that use either of these wavelengths can be used on the ER2510FS controller head.

Laser Types: - Two type of laser devices can be used in fibre cables: Optical Fibre Control (OFC) and non-OFC lasers. The OFC lasers are high-powered and can be used over long distances.

Safety features: - OFC lasers, due to their high power output, usually come with a safety mechanism that switches the laser off as soon as it is unplugged. Non-OFC lasers do not (due to their low power) come with these safety features but they can still inflict damage.

4.2.3 SFP Transceivers

Once you have purchased your FC cables, it may be necessary to connect them to SFP transceivers. These transceivers should typically have at least 2Gbps bi-directional data links, a laser transmitter (for fiber optic cables), LC connector and a metal enclosure to lower the EMI.

NOTE:
LC connectors are small form factor, fiber-optic connectors based on a 1.25-mm ceramic ferrule and the familiar latching mechanism of the RJ-45 modular plug and jack.

Other beneficial features for a typical SFP transceiver include a single power supply and low power dissipation. It is also preferable that these transceivers are hot-swappable. It is also important that any transceiver you use meets the Fibre Channel Performance and reliability specifications.

NOTE
SFP Modules must be purchased separately. Please purchase the correct SFP modules from your Suma RAID subsystem vendor/distributor.

4.2.4 Fibre Channel Topologies

The Fibre Channel Standard has been designed to support three separate topologies. They are point-to-point, fibre channel arbitrated loop (FC-AL) and fabric switch topologies.

- **Point-to-Point**: Point-to-point topology is the simplest topology that can be used. It is a direct connection between two fibre channel devices.

- **FC-AL**: This is the most common topology currently in use. Fibre channel devices are all connected in a loop. Each device is assigned an arbitrated loop physical address (AL_PA). The FC-AL is able to support 127 devices in a single loop.

- **Fabric**: The fabric topology can support up to 2^{24} fibre channel devices. This topology allows many devices to communicate at the same time. To implement this topology a fibre switch is required.

The Suma FC models are all able to support the three topologies discussed above.

4.3 Connecting to Host Ports

4.3.1 Points of Failure

The primary concern for configuring host-side topologies is that ***points of failure*** are avoided. It is therefore recommended that the host side be connected to at least two HBAs. It is also preferable to connect the FC RAID subsystems to the host computer(s) through either a fibre channel hub or a fibre switch.

NOTE:
To create dual redundant data paths on the host side, it is necessary for third party failover software to be installed on the host computer.

4.4 Single Controller Host Connection

4.4.1 Single Host

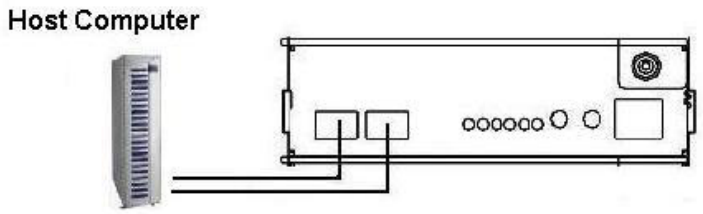

Figure 4- 1: Single FC Controller connected to a single Host Computer

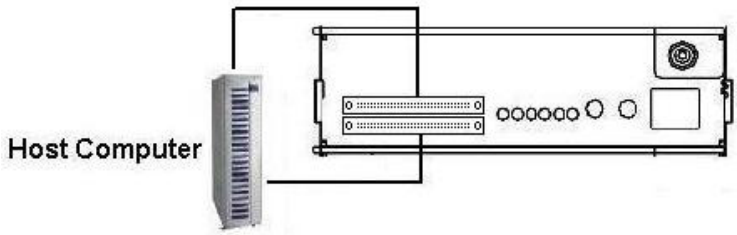

Figure 4- 2: Single SCSI Controller connected to a single Host Computer

In the examples shown in ***Figure 4- 1*** and ***Figure 4- 2***, both the host ports are connected to a single host computer. This provides path redundancy. If one of the host channels should be disconnected for some reason, or the cable connecting one of the host ports to the host computer is damaged, the second path can be used to transmit data, from the subsystem, to the host computer.

4.4.2 Dual Hosts

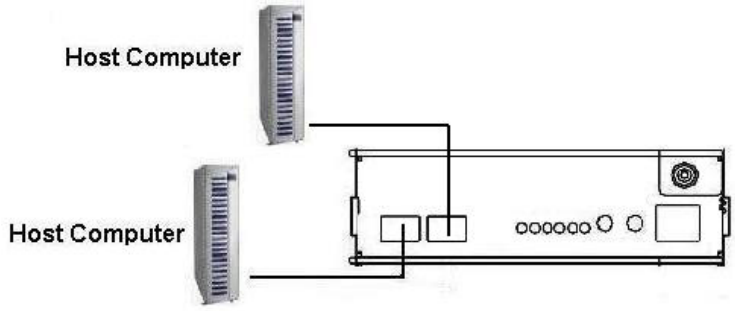

Figure 4- 3: Single FC controller connected to two Host Computers

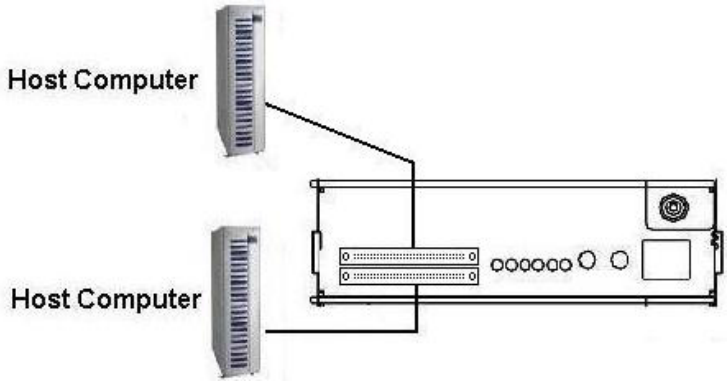

Figure 4- 4: Single SCSI controller connected to two Host Computers

In the examples shown in ***Figure 4- 3*** and ***Figure 4- 4***, the host ports are connected to different host computers. This provides both path and host computer redundancy. If one of the host channels

should be disconnected for some reason, or the cable connecting one of the host ports to the host computer is damaged, the second path can be used to transmit data, from the subsystem, to the host computer. Similarly, if one of the host computers is damaged, the subsystem data will still be accessible and downtime will be minimized.

4.4.3 Fibre Channel Dual Hosts and Fibre Switch

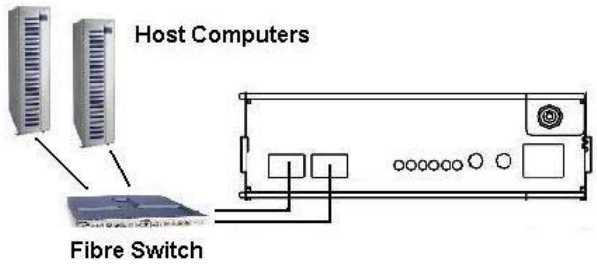

Figure 4- 5: Single Controller Dual Host Fibre Switch Topology

In the configuration shown in ***Figure 4- 5***, both host ports are connected to a single fibre switch which is in turn connected to two host computers. Aside from having path redundancy you also have redundant host computers. If one of the host computers should fail or it's functioning interrupted, the subsystem can still be accessed through the second host computer ensuring that the data on the subsystem is readily available to the network.

4.5 Dual-Redundant Host Connection

4.5.1 Dual Hosts

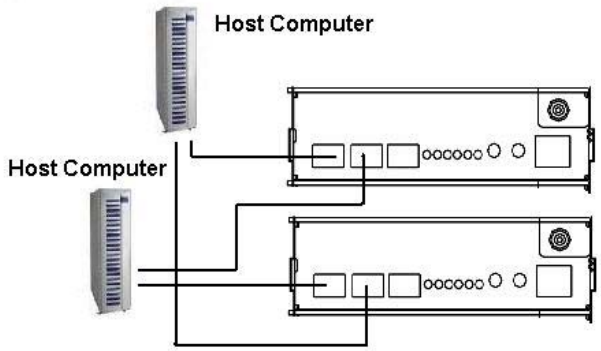

Figure 4- 6: Dual Redundant Dual Host Topology

In the configuration shown in ***Figure 4- 6***, the host channels for each controller are connected to two separate host computers. In this example, all the hardware components; including the controllers, data paths and host computers; are redundant. If any of these components should fail alternative data paths can be used to access the storage subsystem. This configuration uses a loop bypass via the onboard circuits and does not require the use of an external hub.

4.5.2 Dual Fibre Switches and Dual Hosts

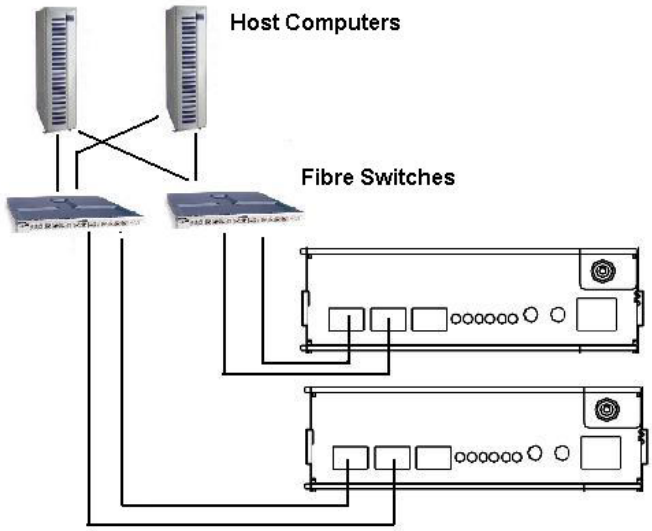

Figure 4- 7: Redundant Controller, Dual Fibre Switch Topology

In the configuration shown in ***Figure 4- 7***, both the host channels of each controller are connected to the same fibre switch. The fibre switch is then connected to two separate host computers to ensure full host side redundancy. Note that all the components; including the controllers, data paths, fibre switches and host computers, in the above configuration are fully redundant. If any of these hardware items fail, data will continue to be accessible through alternate data paths.

4.6 Expansion Port Connection

The controllers on the redundant controller models all come with a third SFP module that can be used for connecting to other FC devices, like JBODs (see ***Figure 4- 8***), and enables end users to expand the storage capacity of the their subsystem.

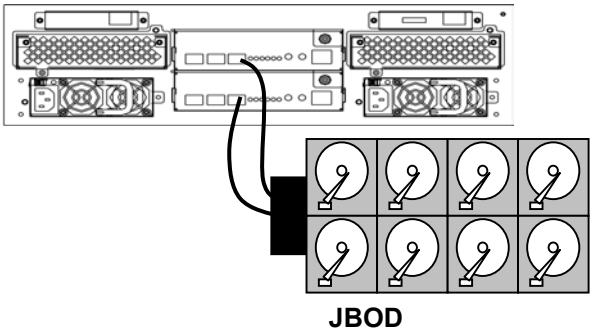

Figure 4- 8: Sample Configuration: Expansion Port Connection

4.7 Sample Configuration: Multi-Pathing

A multi-path topology, an example of which is shown in ***Figure 4-9***, ensures there is no single point of failure with I/O connectivity. All cabling components should be configured into redundant pairs as will be discussed below.

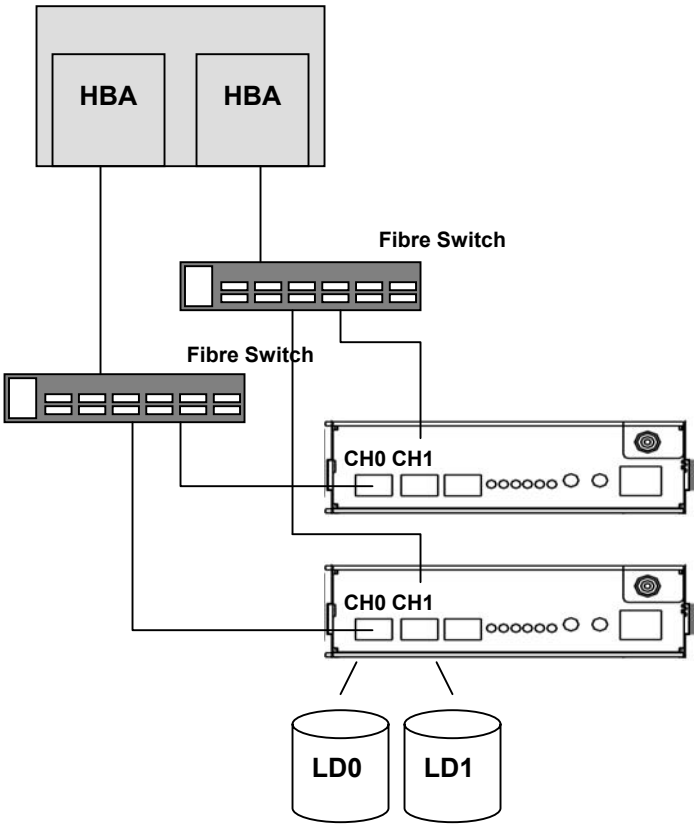

Figure 4- 9: Sample Configuration: Multi-Pathing

Host Computer(s)	One or more dual-ported computers, each having two host adapter cards. Redundant paths for connecting to the array ensures that host can still see data when one data path fails. Note that access to the same array by different host computers can cause contention and data inconsistency. Management software is necessary under this condition.

Logical Drives	LD0 and LD1: logical groups of drives LD0 is mapped to Primary IDs, meaning it is managed by the Primary controller LD1 is mapped to Secondary IDs, meaning it is managed by the Secondary controller

FC Switches	Connection through different switches physically separates the access routes to the array, and guarantees there is no single point of failure.

ID/LUNs on Host Ports	**LD0** is made available as PID0 and PID3 on the host ports of controller A (assuming that controller A is the Primary controller).	
	PID 1	Primary controller host port 0
	PID 3	Primary controller host port 1
	LD1 is made available as SID2 and SID4 on the host ports of controller B (assuming that controller B is the Secondary controller).	
	SID 2	Secondary controller host port 0
	SID 4	Secondary controller host port 1
• Multiple Target IDs can be manually selected on each host port. IDs here are used as examples.		

An administrator will not be able to see the "Secondary controller" from the management software or interface. In redundant mode, two controllers behave as one. "PIDs" and "SIDs" are used as the signifiers for workload distribution. The array configuration utility is exclusively accessed through the Primary controller.

4.7.1 Logical Drive Presentation after Controller Failure

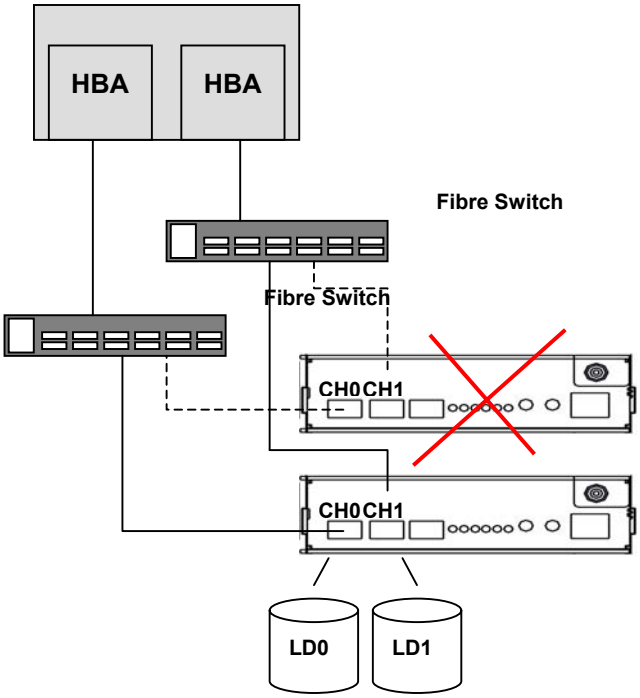

Figure 4- 10: Sample Configuration: Controller Failure

When a controller fails (as shown in ***Figure 4- 10***), IDs presented through the failed controller's host ports will fail over to the surviving controller. These IDs will then be presented through the existing FC links. See the diagram above.

Referring to the original configuration in the previous discussions, ID presentation after a controller failure should look like this:

Surviving Controller	
Host port	IDs
Host port 0 (CH0)	PID1, SID2
Host port 1 (CH1)	PID3, SID4

Each host port now presents both controllers' IDs. Data access is virtually unaffected, provided host has multi-path software that is capable of re-directing data access.

4.7.2 Notes on This Configuration

1. A configured array (logical drive) is accessed through two different host ports. LD0 is accessed through the Primary controller's host ports, LD1 the Secondary controller's host ports. During normal operation, LD0 is presented as two different IDs. The host computer should be installed with a multi-path software to manage I/O distribution.

2. In the event of a RAID controller or cabling component failure, all activities will be inherited by the surviving controller. The arrays will be accessed through the host ports that have a valid connection.

3. Multiple IDs may then coexist on single host port. If the failed controller is replaced afterwards, the original configuration will be restored and the workload can once again be shared between the controllers.

4.8 Power On

Once all the components have been installed in the Suma subsystem and the host channels have been connected to the host and the expansion cables have been connected to the JBODs, the subsystem can be powered on.

4.8.1 Check List

BEFORE powering on the Suma subsystem, please check the following:

1. ***Memory Modules*** – Memory modules have been correctly installed on the controller boards.

2. ***BBU Modules*** – If installed, that the BBU Modules have been installed correctly.

3. ***Hard Drives –*** Hard Drives have been correctly installed on the drive trays.

4. ***Drive Trays*** – **ALL** the drive trays, whether or not they have a hard drive, have been installed into the subsystem.

5. ***Cable Connections –*** The host ports on the subsystem have been correctly connected to a host computer.

6. ***Power Cables –*** The power cables have been connected to the PSU modules on the subsystem and plugged into the mains.

7. ***Ambient Temperature*** – All the subsystem components have been acclimated to the surrounding temperature.

4.8.2 Power On Procedure

When powering on the Suma subsystem, please follow these steps.

1. ***Power on Fibre channel connection devices***

   These devices include the hubs, switches and any other such device that has been connected to the Suma subsystem. Please refer to the manual that came with you fibre channel device to see the power on procedure.

2. ***Power on JBODs***

   If the expansion ports on any of the redundant controllers have been connected to a JBOD, the JBOD must be powered up first. Please refer to the instruction manual that came with the JBOD to see how to see it's own power on procedure.

3. ***Power on the Suma subsystem***

   The Suma subsystem should only be powered on after all the JBODs and fibre channel connection devices have been powered on first. The power on procedure for the Suma subsystem is described below.

4. ***Host Computers***

   The host computers should be the last devices that are turned on. Please refer to the manual that came with your host computers to see its own power on procedure

4.8.3 Suma Power On-Procedure

To power on the subsystem, turn the two power switches, on the rear panel of the subsystem, on (see ***Figure 4- 11***). Each switch controls a single PSU, therefore make sure that both switches are turned on.

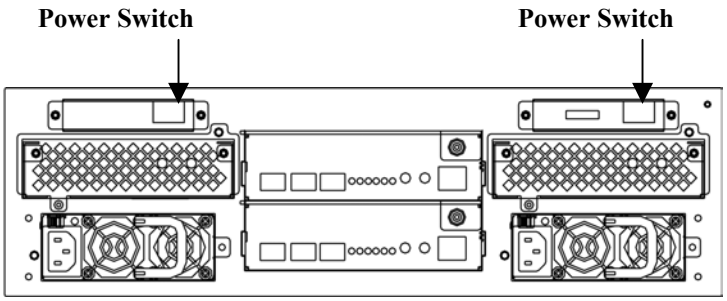

Figure 4- 11: Suma Subsystem Power Switches

CAUTION:
Although the PSUs are redundant and a single PSU can provide sufficient power to the system, it is advisable to turn both the power switches on. If only one PSU is operating and fails, the whole system will crash.

4.8.4 Power On Status Check

Once the Suma subsystem has been powered on, the status of the entire subsystem should be checked to ensure that everything is running smoothly and that there are no complications or malfunctions.

1. ***Controller Module LEDs*** – The *controller ready*, *FC Host Ports Active*, *SATA Device Ports Active* LEDs should all flash green.

2. ***Drive Tray LEDs*** **–** The Green LED for all the drive trays (that contain hard drives) should light up showing that there is power.

3. ***LCD Panel LEDs*** **–** The blue LED on the LCD panel should come on indicating that power is being supplied to the system.

4. ***Firmware and RAIDWatch*** – The overall status of the system may be checked using the pre-installed firmware or the RAIDWatch GUI.

5. ***Audible Alarm*** **-** If any errors should occur during the initialization process, the onboard alarm should be sounded in a hastily repeated manner.

Drive tray LEDs should normally start flashing, indicating the RAID control units are attempting to access the hard drives.

System firmware supports configuration of a delayed sequence for starting drives. Please consult your Generic Operation Manual for more details.

NOTE:
The subsystem has been designed to run continuously. Even if a component failure occurs the fault can be corrected online.

4.8.5 LCD Screen

When Powering On the subsystem the following messages should appear on the front panel LCD screen. Wait for the front panel LCD to show "**READY**" or "**No Host LUN**" before the host boots up. Refer to ***Figure 4- 12*** on how to read the screens.

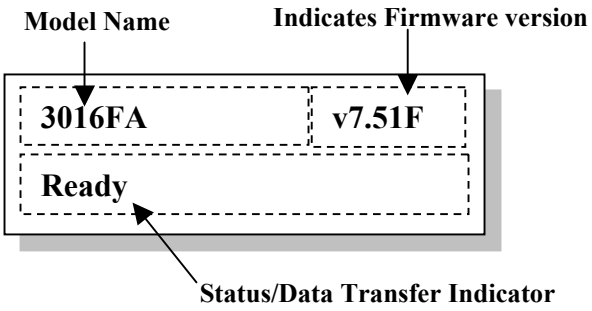

Figure 4- 12: The LCD Start-Up Screen

The LCD screen startup sequence is shown and described in the sequence below.

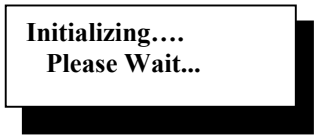

This screen appears when the PSUs are turned on.

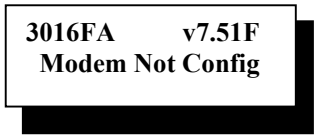

This screen appears after the initialization process. It clearly shows the model name.

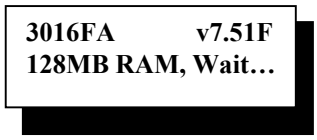

```
3016FA        v7.51F
No Host LUN
```

System is ready. You can now start to configure the subsystem.

4.9 Power Off Procedure

If you wish to power down the Suma subsystem, please follow these steps:

NOTE:

If you wish to power down the Suma subsystem, please ensure that no time-consuming processes, like a "logical drive parity" check or a "background scrub," are running.

1. ***Stop IO access to the system***

   Use the software that is provided on the host computer to stop all IO accesses to the Suma subsystem. Please refer to the user manual that came with your host computer.

2. ***Disconnect the host***

   The host must be disconnected from the subsystem. To do this, disconnect the FC cables from both the host and the Suma subsystem.

3. ***Flush the cache***

   Use the "Shutdown Controller" function to flush all cached data. This prepares the RAID subsystem to be powered down.

4. ***Turn off the power***

Turn off the power switches at the top of the rear panel of the Suma RAID subsystem. Once the RAID subsystem has been powered down, other devices that are connected to the subsystem may be powered down.

This page is intentionally left blank

CHAPTER 4: SYSTEM CONNECTION AND OPERATION 4-1

4.1 OVERVIEW 4-1
4.2 FC HOST CONNECTION PRE-REQUISITES 4-1
4.2.1 Cabling 4-1
4.2.2 FC Lasers 4-2
4.2.3 SFP Transceivers 4-2
4.2.4 Fibre Channel Topologies 4-3
4.3 CONNECTING TO HOST PORTS 4-4
4.3.1 Points of Failure 4-4
4.4 SINGLE CONTROLLER HOST CONNECTION 4-4
4.4.1 Single Host 4-4
4.4.2 Dual Hosts 4-5
4.4.3 Fibre Channel Dual Hosts and Fibre Switch 4-6
4.5 DUAL-REDUNDANT HOST CONNECTION 4-7
4.5.1 Dual Hosts 4-7
4.5.2 Dual Fibre Switches and Dual Hosts 4-8
4.6 EXPANSION PORT CONNECTION 4-8
4.7 SAMPLE CONFIGURATION: MULTI-PATHING 4-9
4.7.1 Logical Drive Presentation after Controller Failure 4-12
4.7.2 Notes on This Configuration 4-13
4.8 POWER ON 4-13
4.8.1 Check List 4-13
4.8.2 Power On Procedure 4-14
4.8.3 Suma Power On-Procedure 4-15
4.8.4 Power On Status Check 4-16
4.8.5 LCD Screen 4-17
4.9 POWER OFF PROCEDURE 4-18

BBU, 4-14

drive tray, 4-14

fabric, 4-3
fabric switch, 4-3
failover software, 4-4
FC, 4-1
FC-AL, 4-3
fibre switch, 4-6
fibre switche, 4-8

hard drives, 4-14
HBA, 4-4
host redundancy, 4-5, 4-8

laser, 4-1, 4-2
LC connector, 4-2
LCD, 4-16

memory module, 4-13
multi-path topology, 4-9

non-OFC, 4-2

OFC, 4-2
optical cables, 4-1

path redundancy, 4-5, 4-6
points of failure, 4-4
point-to-point, 4-3
power cable, 4-14
power down, 4-17
power on, 4-13
Power On, 4-13
power switch, 4-15
primary controller, 4-11

SFP, 4-2
SFP connector, 4-1
single host, 4-4
startup, 4-17