Chapter 2

Hardware Installation

The modular design of the Suma RAID subsystem simplifies the installation process. This chapter describes the installation procedures for the Suma RAID Controller subsystem.

CAUTION
Please note that the installation instructions described in this manual should be carefully followed. If they are not carefully followed, your system may be damaged.

2.1 Installation Pre-requisites

1. **Static Free Installation Environment** – The Suma subsystem must be installed in a static free environment to minimize the possibility of electrostatic discharge (ESD) damage. (See ***Section 2.2***).

2. **Component Check –** Before the Suma subsystem is installed, users should, during the unpacking process, check to see that they have received all the required components. (See ***Section 2.3***)

3. ***Memory Modules*** – If the users wish to change the pre-installed memory modules, the separately purchased modules must be installed by the end user. (See ***Section 2.5.1***)

4. ***Dongle Kits-*** For the redundant models, either SATA-to-SATA or SATA-to-PATA MUX kits must be installed for the

redundant controller subsystem. If you wish to use PATA drives in the single controller subsystem a SATA-to-PATA dongle kit needs to be installed. (See ***Section 2.8.2***)

5. ***Hard drives*** **–** SATA or PATA hard drives must be purchased separately prior to installation of the Suma subsystem. (See ***Section 2.8.3*** and ***Section 2.8.4***)

6. **Cabling** – All the FC cables that are used to connect the Suma subsystem to the host and used for the expansion port must be purchased separately. (See ***Section 4.2.1***)

7. **SFP Transceivers** – If the FC cables that were previously purchased do not come with pre-installed SFP transceivers, these must be separately purchased and connected to the SFP cables. (See ***Section 4.2.3***)

2.2 Static-Free Installation

Static electricity can damage the electronic components of the system. Most of the controllers that are returned for repair are the results of improper installation and ESD damage. To prevent ESD damage to any of the components, before touching or handling them follow these precautions:

- discharge the static electricity from your body by wearing an anti-static wrist band or by touching a grounded metal surface.
- Avoid carpets, plastic, vinyl or styrofoam in your work area.
- Handle any components by holding its edges or metal frame. Avoid touching PCB boards or connector pins.

2.3 Unpacking the Subsystem

The Suma subsystem will be packed in two separate levels as shown in ***Figure 2- 1*** below. Carefully check the items contained in each box before proceeding with installation.

NOTE:
A detailed packing list can be found in the ***Appendix D*** of this manual.

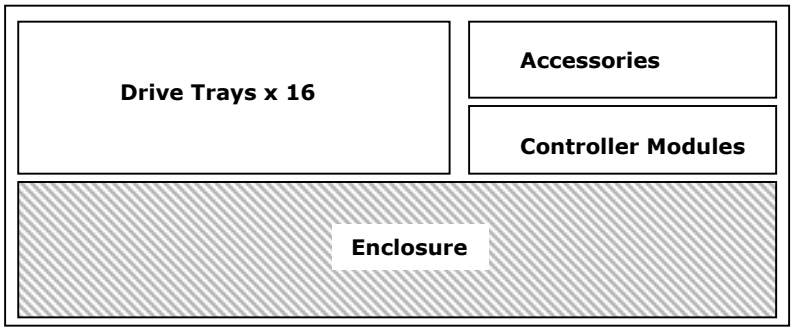

Figure 2- 1: Side View of the Packing Case

Upper Level:- The boxes on the upper level contain:

- 16 drive canisters
- controller modules
- battery modules (***Optional item for single controller subsystems***)
- accessories

Lower Level:- The lower box should contain the enclosure chassis with all the pre-installed components. The pre-installed components should include:

- PSU modules
- LCD panel
- Cooling FAN modules

- Midplane
- Driveplane

Accessory items are placed on top of the controller modules. They include power cords, Audio Jack cable and a CD containing both the Hardware Manual (this document) and the RAIDWatch User's Manual.

2.4 General Installation Procedure

If the following steps are followed, the installation of the Suma subsystem should be smooth and efficient. Detailed, illustrated instructions for each step are given in the following sections.

CAUTION
To ensure that your system is correctly installed, please follow the steps outlined below. If you follow these steps then the installation will be fast and efficient. If you do not follow these steps then you may accidentally install the hardware incorrectly.

1. Install the cache memory (if change needs to be made) – ***Section 2.5.2***.

2. Install the BBU (if required by user)– ***Section 2.6***

3. Install the Controller Module – ***Section 2.7***

4. Install the hard drives into the drive trays - ***Section 2.8***

5. Install the drive trays (with the hard drives) into the subsystem - ***Section 2.9***

2.5 Memory Module Installation

The Suma subsystem comes with pre-installed SDRAM DIMMs. The single controller models come with 128MB SDRAM DIMM

modules and the redundant models come with 256MB SDRAM DIMM modules. If the user wishes to use SDRAM modules with a different size, the pre-installed modules must be removed and the new ones installed.

If you do not wish to change the memory modules, please move on to the ***Section 2.6***. If you wish to install new memory modules please refer to the installation procedure below.

2.5.1 Selecting the DIMMs

If you are changing the memory modules on the Suma subsystem controller, when purchasing the DIMM modules the following factors must be considered:

Type – The Suma subsystem is able to support SDRAM DIMM memory modules with ECC checking.

Size – The Suma subsystem is able to support a cache size between 128MB and 1GB

Speed – The Suma subsystem is able to support non-buffered SDRAM DIMM modules that operate at a speed of 133MHz

Redundant Controllers – The memory modules for the controllers in the redundant controller Suma subsystems must have exactly the **SAME SIZE** and **SPEED**.

Supported DIMM modules - Please contact our technical support department for an updated list of DIMM modules that are supported by the controllers on the Suma subsystem.

2.5.2 DIMM Module Installation Steps

WARNING:
Prior to installing new memory modules, it is necessary to remove the pre-installed modules. Do this with care. Sensitive components can be damaged during the process.

1. First remove the previously installed memory modules from the controller module.

2. ***Install a memory module*** into the DIMM socket by positioning the module toward the socket with the notches in the module aligned with keys in the socket. Check that the module is completely seated and tabs on the sides of the socket hold the module firmly in place.

3. If you do not wish to install a BBU module***, install the controller module.*** Controller Module installation instructions can be found in ***section 2.7***. If you wish to ***install a BBU module*** then please refer to ***section 2.6*** for installation instructions.

2.6 BBU Installation

NOTE:
The BBU is an optional item on the single controller models and a standard item on the redundant controller model.

The BBU is used to save the data stored in the cache in the event of power loss. It is able to support the memory cache for up to 72 hours. If you are not installing a BBU module then please move on to ***section 2.7***. If you wish to install a BBU module please follow the instructions given in ***section 2.6.1***.

2.6.1 Installation Procedure

To install the BBU into the controller module, please follow these steps.

1. ***Make sure that a DIMM module has been installed***. The BBU module is installed directly above the DIMM module. If the BBU is installed before the DIMM module, it will have to be removed to install a DIMM module.

2. ***Remove the two retention screws*** that are on either side of the DIMM module, diagonally across from each other.

3. Two spacers should have come with each BBU unit. Install one spacer into each of the screw holes that previously contained the retention screws. (see ***Figure 2- 2***)

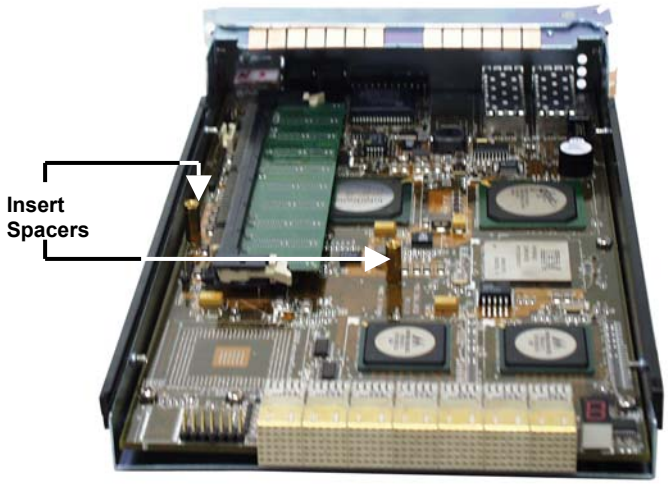

Figure 2- 2: Insert Spacers

4. Once the spacers have been inserted, ***connect the BBU connector*** to the onboard connector on the side of the controller board. Make sure that the connector is firmly attached and that the connection is secure. (See ***Figure 2- 3***)

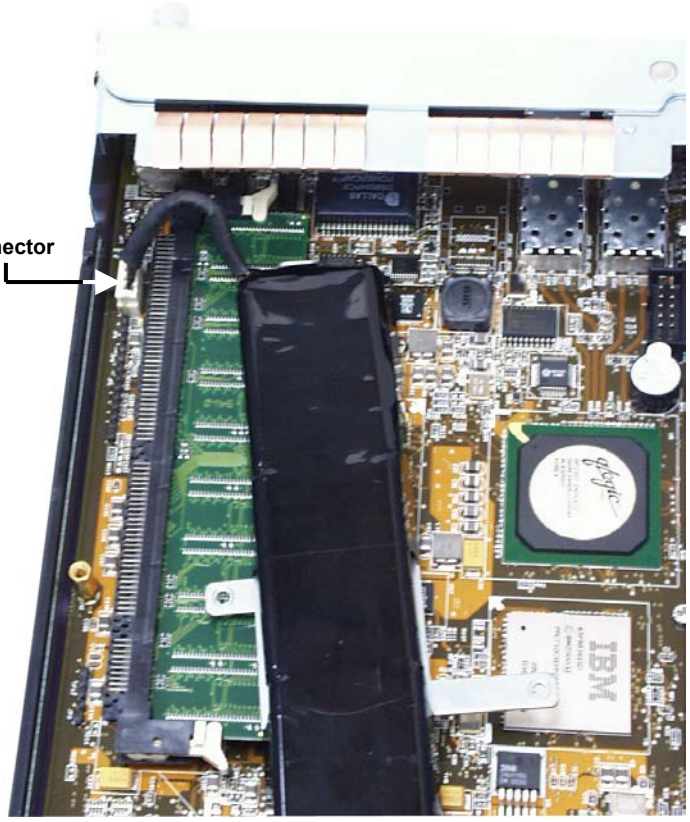

Figure 2- 3: Connecting the BBU to the controller board

5. After the BBU connectors have been firmly connected to the controller board, ***mount the BBU bracket*** onto the two spacers. Correctly line the arms of the bracket with the two spacers such that it is possible to re-insert the previously removed retention screws. (See ***Figure 2- 4***)

6. Once the BBU bracket has been correctly aligned with the spacers, ***re-insert the retention screws***, through the arms of the bracket, into the spacers. This will secure the BBU to the controller module. (See ***Figure 2- 4***)

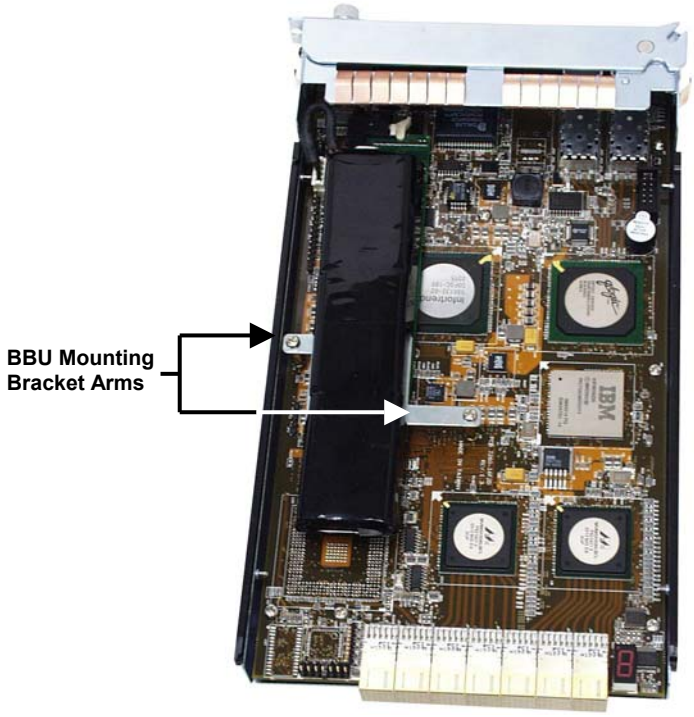

Figure 2- 4: Mounting the BBU

7. Once the DIMM module and the BBU module have been installed, install/reinsert the controller module into the subsystem.

2.7 Installing the RAID Controller Module

To install the controller module, please follow these steps:

1. ***Hold the RAID controller unit by its edges*** and insert it into the controller bay. Push the unit in until it reaches the end of the controller bay. The guide rails on the sides of the controller bay should make the plug-in process an effort-less task. You should be able to feel the contact resistance of the docking connector when pushing the controller inwards.

2. ***Pull the ejector handle outwards*** and orient it to an angle of approximately 15 degree relative to the controller rear panel. Carefully orient it so that the notches on the handle can lock onto the protruded edge of enclosure rail on the left-hand side. This is crucial for the positive insertion of the controller unit. (See ***Figure 2- 5***)

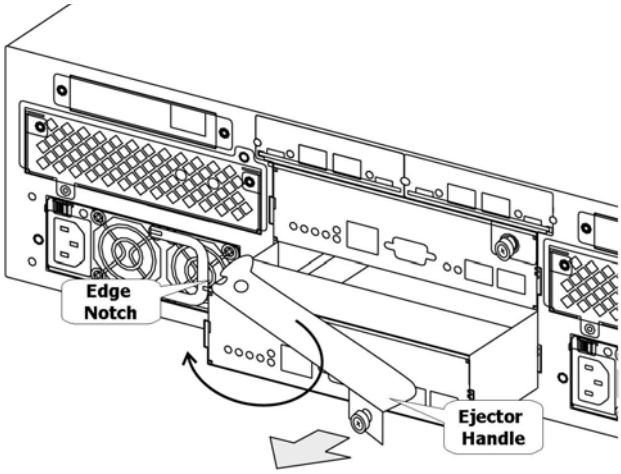

Figure 2- 5: Inserting the Controller Module

3. Secure the controller module to the enclosure by fastening the hand screw. Insert the retention screw on the right hand side of the ejector handle.

2.8 Hard Drive Installation

WARNING:

1. *Handle hard drives with extreme care. Hard drives are very delicate. Dropping a drive onto a hard surface (even over a short distance), hitting or contact with the circuits on the drives by your tools, may all cause damage to drives*

2. *Observe all ESD prevention methods when installing drives.*

2.8.1 Hard Drive Installation Pre-requisites

NOTE:
The hard drive and drive trays should only be installed into the subsystem once the subsystem has been mounted into a cabinet. If the hard drives are installed first then the subsystem will be too heavy and mounting it in the cabinet will be far more difficult.

Hard drives for the Suma subsystem must be purchased separately. When purchasing the hard drives, the following factors must be considered:

Capacity (MB / GB) –Use drives with the same capacity. RAID arrays use a "least-common-denominator" approach. The maximum capacity of each drive the array can use is the maximum capacity of the smallest drive. Choose big drives of the same size.

Profile – The drive trays and bays of the system are designed for 3.5" wide x 1" high hard drives. It is highly recommended that users do not try to use drives of any other size.

Drive Type – The Suma subsystem described in this manual can use either SATA or PATA hard drives. Please ensure that you purchase the correct hard drives.

2.8.2 Dongle Kit Installation

Single controller subsystems:- If you have purchased a single controller Suma subsystem and wish to use PATA drives in the subsystem, separately purchased SATA-to-PATA dongle kits are available and must be installed into each drive tray prior to the installation of the hard drive.

Dual-redundant controller subsystems:- if you have purchased a dual-redundant Suma subsystem then you will be required to install either SATA-to-SATA MUX kits that enable users to install SATA hard drives into their redundant subsystem, or the SATA-to-PATA MUX kits that enable users to install PATA hard drives into their redundant subsystem. The MUX kits must all be purchased separately.

1. ***Installation***:- The installation procedure for the dongle and MUX kits is the same. The dongle/MUX kit shown in ***Figure 2-6*** is mounted onto a metal base plate that has three pre-drilled holes reserved for retention screws

Figure 2- 6: SATA-to-PATA Dongle/MUX kit

2. Three corresponding pre-drilled screw holes can be found at the back of the drive tray shown in ***Figure 2- 7***.

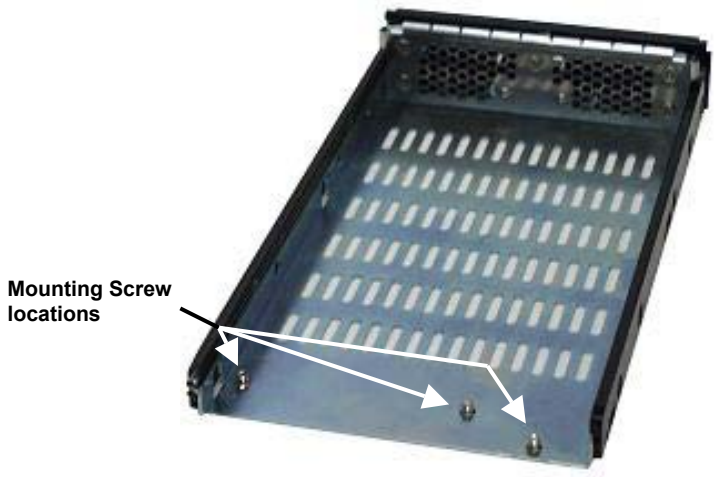

Figure 2- 7: Empty Drive Tray

3. ***Place the dongle/MUX kit at the back of the drive tray***. Hold the dongle kit in place and turn the drive tray over. ***Align the holes*** in the base of the drive tray with the holes in the dongle/MUX kit base tray.

4. ***Insert the three available retention screws*** from the bottom of the drive tray. These screws will firmly secure the dongle/MUX kit to the drive tray and facilitate the installation of the appropriate drive.

2.8.3 Drive Intstallation Without a Dongle/MUX Kit

1. ***Place the SATA hard drive into the drive tray*** (as shown in ***Figure 2- 8***)making sure that the hard drive is oriented in such a way that the single connector attachment (SCA) connector is facing the back of the drive tray.

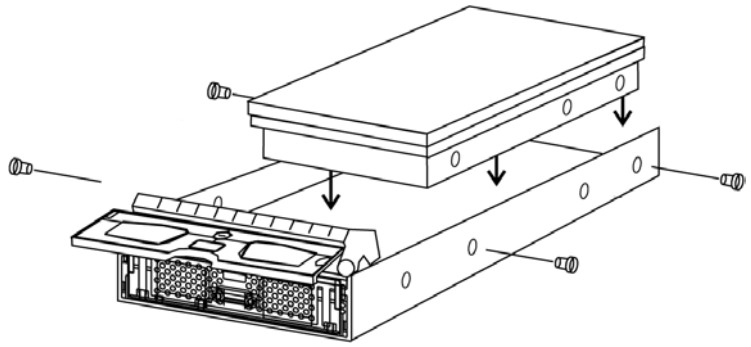

Figure 2- 8: Installing a SATA Hard Drive

2. ***Adjust the drive's location*** until the mounting holes in the drive canister are aligned with those on the hard drive. Secure the drive with 4 supplied 6/32 flat-head screws. (See ***Figure 2- 8***)

WARNING:
Only use screws supplied with the drive canisters. Longer screws might damage the drive.

2.8.4 Drive Installation with Dongle/MUX Kit

1. ***For the SATA drives, connect the HDD to the dongle/MUX kit*** and make sure that the dongle/MUX kit connector is firmly attached to the HDD connector (. ***For the PATA drives, connect the ATA and power cables*** from the dongle/MUX kit to the hard drive (see ***Figure 2- 9***). Make sure that these connections are secure and will not come loose.

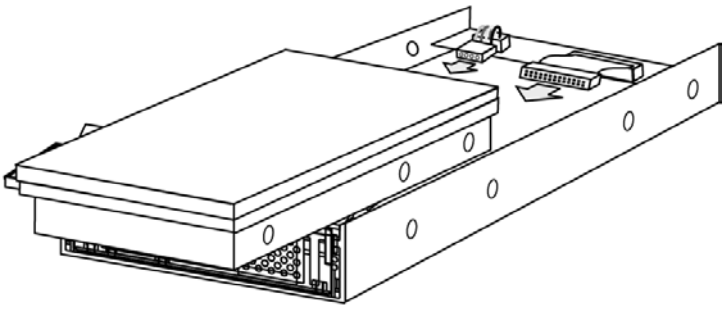

Figure 2- 9: PATA Hard Drive Connectors

2. Once the connectors from the dongle board have been firmly attached to the hard drive, ***place the hard drive into the drive tray*** as shown in ***Figure 2- 10***.

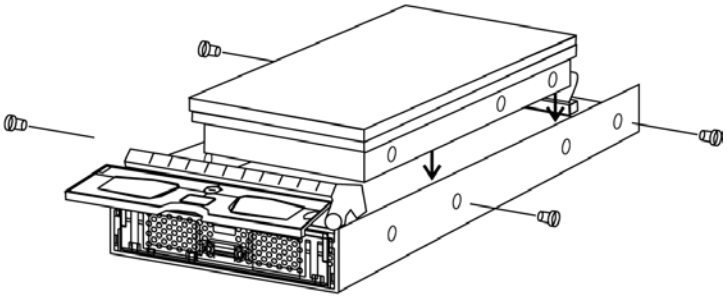

Figure 2- 10: Inserting the PATA Drive

3. ***Adjust the drive's location*** until the mounting holes in the drive canister are aligned with those on the hard drive. Secure the drive with 4 supplied 6/32 flat-head screws.

WARNING:
Only use screws supplied with the drive canisters. Longer screws might damage the drive.

2.9 Drive Tray Installation

Once the hard drives have been installed in the drive trays, the drive trays must be installed into the Suma subsystem.

1. Make sure ***the key-lock is in the unlocked position***. The key-lock is unlocked if the groove (on its face) is in a horizontal orientation. If the groove is in a vertical position, as shown in ***Figure 2- 11*** then the key-lock is locked and the front flap on the drive tray cannot be opened.

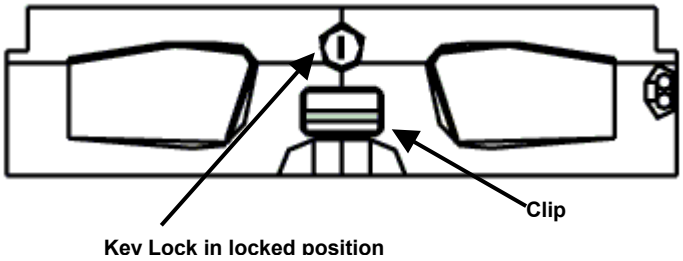

Figure 2- 11: Front view of an individual drive tray.

2. ***Open the front flap on the drive tray*** (see ***Figure 2- 12***) To open the flap, push the clip (shown in ***Figure 2- 11***) on the front of the drive tray in an upward direction. The clip is easily accessible and is easily lifted.

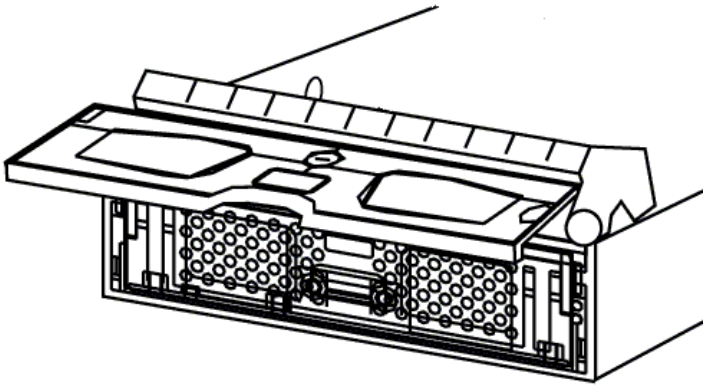

Figure 2- 12: Drive Tray Front Flap

3. ***Line the drive tray up with the slot*** in which you wish to insert it. Make sure that it is resting on the rails inside the enclosure. Once the drive tray is lined up with the slot, gently slide it in. This should be done smoothly and gently.

4. ***Close the front flap on the drive tray***. Make sure the front flap is closed properly. Closing the front flap ensures that the SCA connector at the back of the drive tray is firmly connected to the corresponding connector on the mid-plane board. If the front flap is not closed properly then the connection between the HDD and the subsystem will not be secure.

5. To lock the flap into place turn the key-lock until the groove on its face is in a vertical orientation. (See ***Figure 2- 13***)

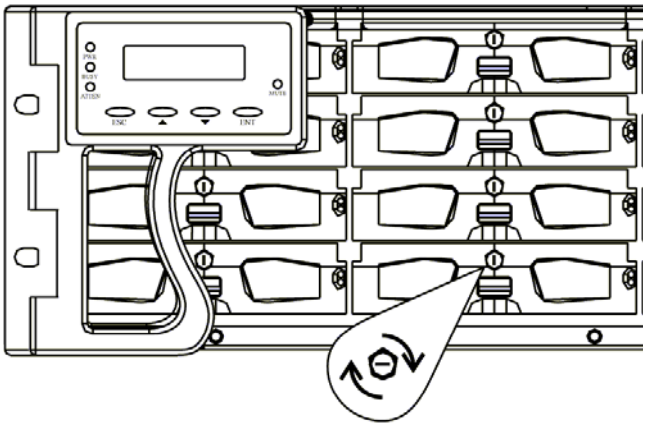

Figure 2- 13: Drive Tray Key-Lock Rotation

WARNING:
All the drive trays (even if they do not contain a hard drive) must be installed into the enclosure. If they are not installed into the enclosure then the ventilation required for cooling will not be normalized and the subsystem will be irreparably damaged.

accessory items, 2-4
audio jack cable, 2-4

BBU, 2-6

capacity, 2-11
component check, 2-1
controller module, 2-10

DIMM modules, 2-5
drive bay, 2-11
drive tray, 2-11, 2-16

ECC checking., 2-5
ESD, 2-1, 2-2

front flap, 2-16, 2-17

hard drive, 2-2, 2-11

lower level, 2-3

memory module, 2-1, 2-5

PATA drive, 2-11, 2-14
power cord, 2-4
pre-installed components, 2-3

RAIDWatch User's Manual, 2-4

SATA drive, 2-11, 2-12, 2-14
SATA-to-PATA, 2-1
SATA-to-PATA dongle kit, 2-12
SATA-to-PATA MUX kit, 2-12
SATA-to-SATA, 2-1
SATA-to-SATA MUX kit, 2-12
SDRAM DIMM, 2-4
SFP transceivers, 2-2
static free, 2-1

unpacking, 2-1
upper level, 2-3

CHAPTER 2: HARDWARE INSTALLATION 2-1

2.1 INSTALLATION PRE-REQUISITES 2-1
2.2 STATIC-FREE INSTALLATION 2-2
2.3 UNPACKING THE SUBSYSTEM 2-3
2.4 GENERAL INSTALLATION PROCEDURE..... 2-4
2.5 MEMORY MODULE INSTALLATION 2-4
2.5.1 Selecting the DIMMs..... 2-5
2.5.2 DIMM Module Installation Steps..... 2-6
2.6 BBU INSTALLATION..... 2-6
2.6.1 Installation Procedure 2-7
2.7 INSTALLING THE RAID CONTROLLER MODULE 2-10
2.8 HARD DRIVE INSTALLATION..... 2-11
2.8.1 Hard Drive Installation Pre-requisites 2-11
2.8.2 Dongle Kit Installation..... 2-12
2.8.3 Drive Intstallation Without a Dongle/MUX Kit 2-13
2.8.4 Drive Installation with Dongle/MUX Kit 2-14
2.9 DRIVE TRAY INSTALLATION 2-16

Figure 2- 1: Packing Case 3
Figure 2- 2: Insert Spacers 7
Figure 2- 3: Connecting the BBU to the controller board..... 8
Figure 2- 4: Mounting the BBU 9
Figure 2- 5: Inserting the Controller Module 10
Figure 2- 6: SATA-to-PATA Dongle/MUX kit..... 12
Figure 2- 7: Empty Drive Tray 13
Figure 2- 8: Installing a SATA Hard Drive 14
Figure 2- 9: PATA Hard Drive Connectors 15
Figure 2- 10: Inserting the PATA Drive 15
Figure 2- 11: Drive Tray Front Flap 17
Figure 2- 12: Drive Tray Key-Lock Rotation 18